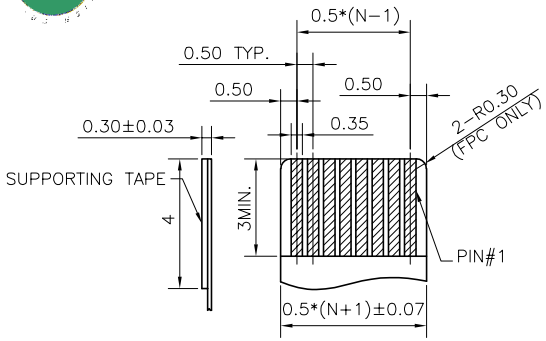

APPLICABLE FPC/FFC LAYOUT
GENERAL TOLERANCE ±0.05

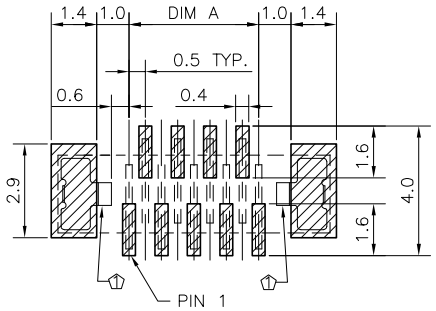

RECOMMENDED PCB LAYOUT(ODD PIN)
GENERAL TOLERANCE ±0.05

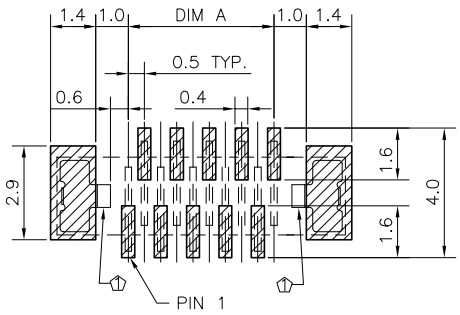

RECOMMENDED PCB LAYOUT(EVEN PIN)
GENERAL TOLERANCE ±0.05

NOTES:
1. MATERIAL:
   1.1 HOUSING: THERMOPLASTIC, HIGH TEMP.,UL94V−0;
   1.2 ACTUATOR: THERMOPLASTIC, HIGH TEMP., UL94V−0;
   1.3 CONTACT: COPPER ALLOY
   1.4 FITTING NAIL: COPPER ALLOY
2. FINISH:
   2.1 CONTACT:
   50u" MIN. NICKEL UNDERPLATING OVERALL.
   1:GOLD FLASH .
   2.2 FITTING NAIL:
   50u" MIN. NICKEL UNDERPLATNG OVERALL.
   N:100u" MIN. MATTE TIN PLATING.
3. REFLOW SOLDER CAPABLE TO 260°C
   PER ACES SPEC.
4. SPEC. PLS. REFER TO PS−50552−XXXXX−XXX
5. PACKAGE PLS. REFER TO 91501−XXXXX−TRP
6. PART NUMBER

52514−XXX X X−XXX

NO OF CKT

PACKING
4: TAPE & REEL WITH MYLAR

PLATING
1: G/F

XXX	HOUSING COLOR	ACTUATOR COLOR
001	BLACK	WHITE

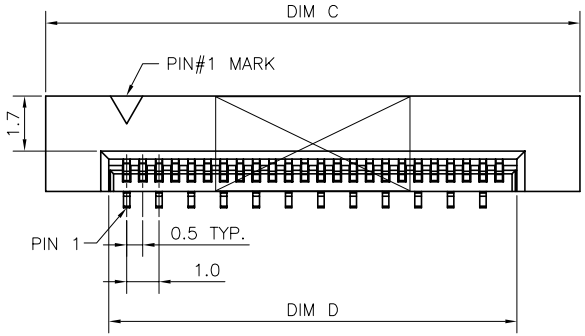

① OPEN THIS SPACE FOR FITTING NAIL PLATE AREA

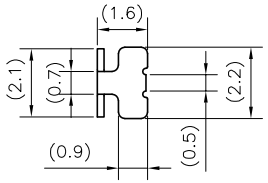

FITTING NAIL PLATE DIM.

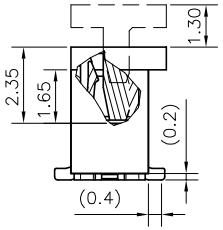

SECTION A−A

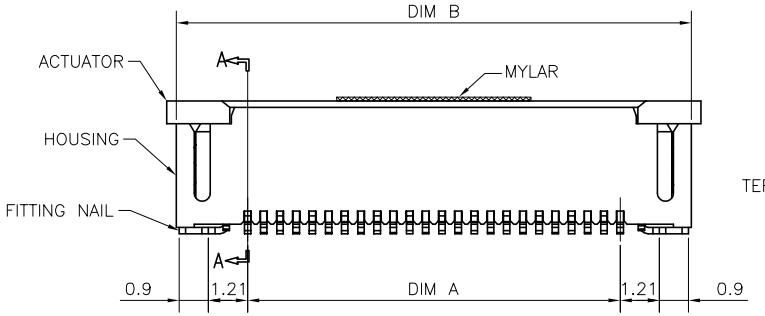

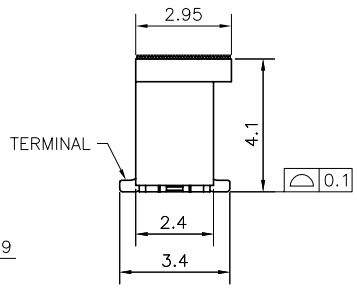

CKT	DIM A	DIM B	DIM C	DIM D
024	11.50	15.90	16.50	12.60

QUALITY SYMBOLS
MAJOR
CRITICAL

GENERAL TOLERANCES
(UNLESS SPECIFIED)
X. ±0.5
.X ±0.25
.XX ±0.15
.XXX ±0.1
ANGLES ±2°

DRAWN BY: Xu, Bin	DATE: 19'/02/13	ACES ELECTRONICS
CHECKED BY: Xu, Zhi Yong	DATE: 19'/02/13	TITLE: 0.5mm PITCH ZIF CONN. SMT S/T TYPE
APPROVED BY: Xu, Zhi Yong	DATE: 19'/02/13	
UNITS: mm		SIZE: A4 / RFQ NO.: RFQ-1901095
SCALE: 1 : 1	SHEET NO.: 1 OF 1	REV: A / DWG NO.: 52514-XXXXX-XXX